BEC Audio
888-556-3998

Discounted Cornell

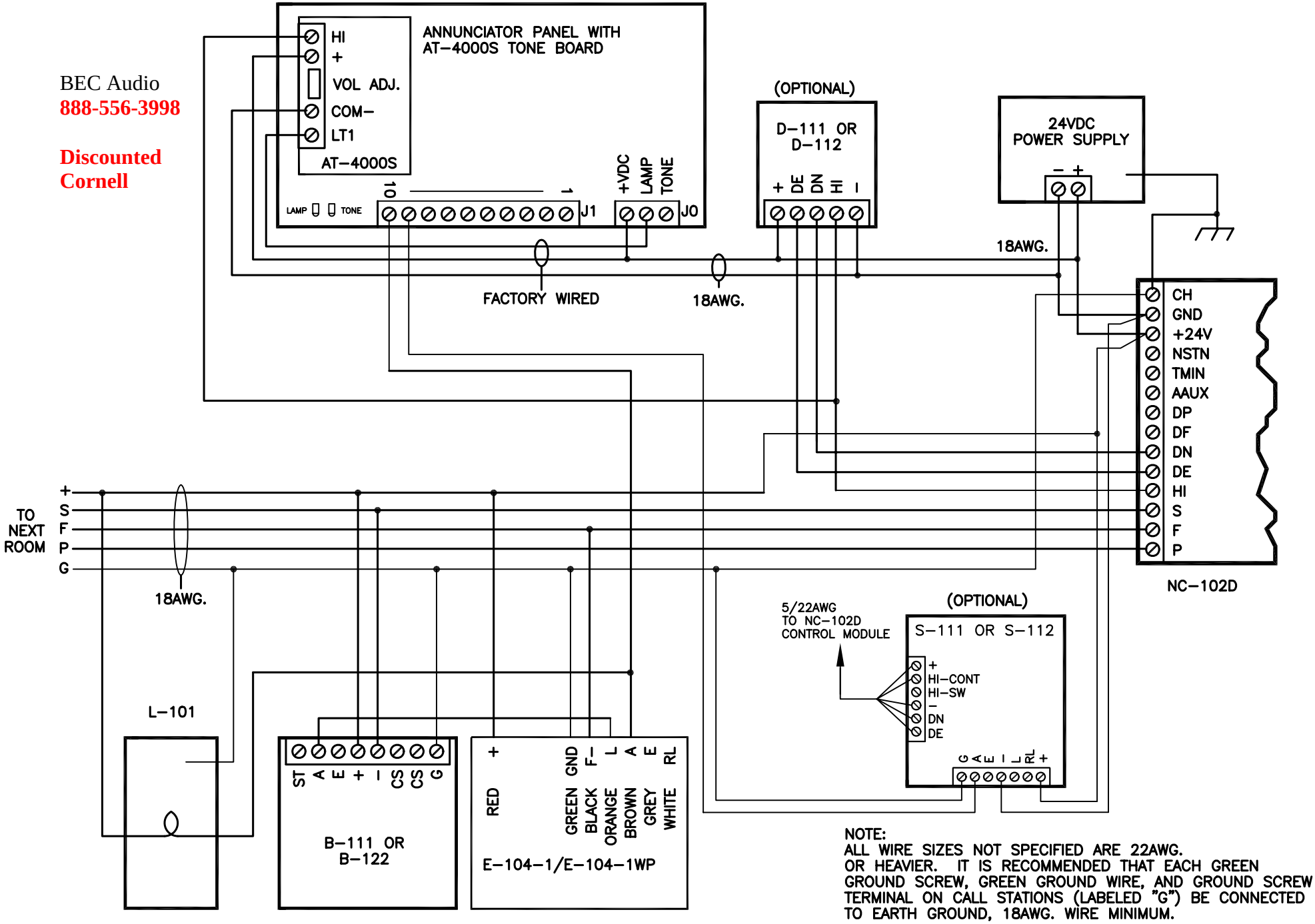

NOTE:
ALL WIRE SIZES NOT SPECIFIED ARE 22AWG. OR HEAVIER. IT IS RECOMMENDED THAT EACH GREEN GROUND SCREW, GREEN GROUND WIRE, AND GROUND SCREW TERMINAL ON CALL STATIONS (LABELED "G") BE CONNECTED TO EARTH GROUND, 18AWG. WIRE MINIMUM.

CORNELL Communications, Inc.
sales@cornell.com 414-351-4660
Web: www.cornell.com 414-351-4657(fax)

DATE: JANUARY 2, 2007		*SYSTEM:*	*4000 NURSE CALL*
TITLE: DUAL STATUS NC-102D/ L-101 E-104-1		*DRAWING #*	*90005-07*